TQ 84



Article features

- Very compact
- Excellent for retrofitting, as the primary circuit does not have to be interrupted
- Especially suitable for digital measuring instruments
- Super fast and easy installation
- Transformer secured by UV-resistant cable ties
- This cable conversion current transformer is supplied with multi-colour coded connection leads

Technical data	
Round conductor	Ø 42 mm
Dimensions (W × H × D)	66 × 137 × 55 mm
Design	Split-core cable current transformer
Secondary connection	Cable
Touch protection	yes
Packaging (W × H × D)	155 × 139 × 70 mm
Rated current	250, 300, 400, 500, 600, 750, 800, 1000 A
Instrument security factor	FS 5

Drawings and views

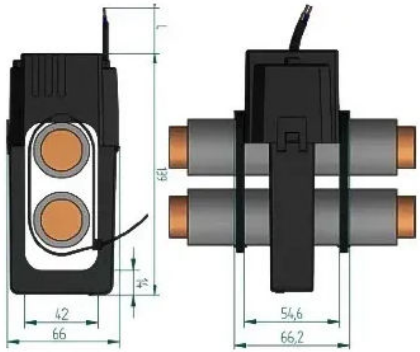

Dimensional drawing 1

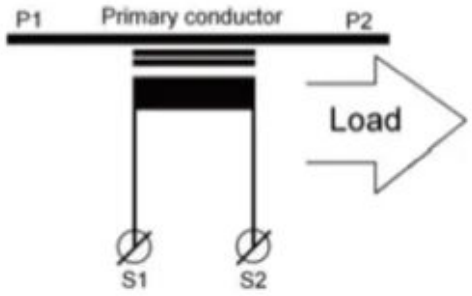

Wiring diagram 1



Open

AR Tradelectric GmbH
Boligweg 5a
67373 Dudenhofen · Germany
info@stromwandler24.de · stromwandler24.de
stromwandler24.de/en/produkte/kabelumbau-stromwandler/tq-84

Managing director: Annette Fast
Amtsgericht Ludwigshafen HRB 69182
VAT ID DE361168308

Types

Output	Cl.	Rated current A							
		250	300	400	500	600	750	800	1000
1 A	0.5	–	–	0.5 VA 70006-1332	0.5 VA 70006-1333	0.5 VA 70006-1334	0.5 VA 70006-1335	0.5 VA 70006-1336	0.5 VA 70006-1337
	1	0.5 VA 70006-1330	0.5 VA 70006-1331	–	–	–	–	–	–
5 A	0.5	–	–	–	–	0.5 VA 70006-1342	0.5 VA 70006-1343	0.5 VA 70006-1344	0.5 VA 70006-1345
	1	–	0.5 VA 70006-1339	0.5 VA 70006-1340	0.5 VA 70006-1341	–	–	–	–

Conditions of use	
Normative standards	IEC 61869 part 1 + 2
Rated short-time thermal current	Ith = 60 x Ipr / 1s
Rated continuous thermal current	Icth = 1
Rated insulation level	0,72/3/-kV
Rated frequency	50 - 60 Hz
Insulation class	E / F / H

Environmental conditions	
Installation location	Indoor use
Ambient temperature	-10°C ... +55°C
relative humidity	5% ... 85%, no condensation
Altitude	up to 2000 m
Protection class (secondary terminals)	IP20
Remark	Only suitable for insulated conductor

Secondary cable		
Secondary current	Diameter	Length
1 A	0.5 mm	5 m
5 A	1.5 mm	3 m