TQ 42



Article features

- Very compact
- Excellent for retrofitting, as the primary circuit does not have to be interrupted
- Especially suitable for digital measuring instruments
- Super fast and easy installation
- Transformer secured by UV-resistant cable ties
- This cable conversion current transformer is supplied with multi-colour coded connection leads

Technical data	
Round conductor	Ø 42 mm
Dimensions (W × H × D)	66 × 97 × 55 mm
Design	Split-core cable current transformer
Secondary connection	Cable
Touch protection	yes
Packaging (W × H × D)	124 × 137 × 70 mm
Rated current	400, 250, 300, 500, 600, 750, 800, 1000 A
Instrument security factor	FS 5

Drawings and views

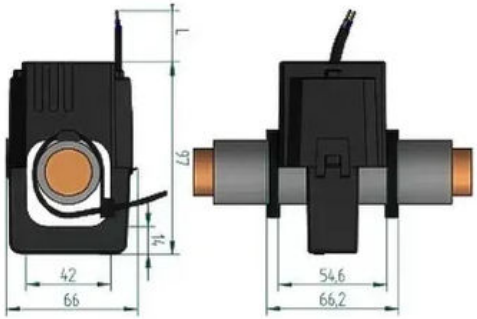

Dimensional drawing 1

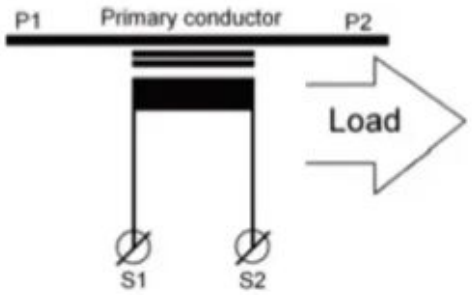

Wiring diagram 1



Open

Types

Output	Cl.	Rated current A							
		250	300	400	500	600	750	800	1000
1 A	0.5	–	–	0.5 VA 70006-1317	0.5 VA 70006-1318	0.5 VA 70006-1319	0.5 VA 70006-1320	0.5 VA 70006-1321	0.5 VA 70006-1322
	1	0.5 VA 70006-1315	0.5 VA 70006-1316	–	–	–	–	–	–
5 A	0.5	–	–	–	–	0.5 VA 70006-1326	0.5 VA 70006-1327	0.5 VA 70006-1328	0.5 VA 70006-1329
	1	–	0.5 VA 70006-1323	0.5 VA 70006-1324	0.5 VA 70006-1325	–	–	–	–
333 mV	1	–	–	70006-1076	–	–	–	–	–

Conditions of use	
Normative standards	IEC 61869 part 1 + 2
Rated short-time thermal current	Ith = 60 x Ipr / 1s
Rated continuous thermal current	Icth = 1
Rated insulation level	0,72/3/-kV
Rated frequency	50 - 60 Hz
Insulation class	E / F / H

Environmental conditions	
Installation location	Indoor use
Ambient temperature	-10°C ... +55°C
relative humidity	5% ... 85%, no condensation
Altitude	up to 2000 m
Protection class (secondary terminals)	IP20
Remark	Only suitable for insulated conductor

Secondary cable		
Secondary current	Diameter	Length
1 A	0.5 mm	5 m
5 A	1.5 mm	3 m