TQ 27



Article features

- Very compact
- Excellent for retrofitting, as the primary circuit does not have to be interrupted
- Especially suitable for digital measuring instruments
- Super fast and easy installation
- Transformer secured by UV-resistant cable ties
- This cable conversion current transformer is supplied with multi-colour coded connection leads

Technical data	
Round conductor	Ø 28 mm
Dimensions (W × H × D)	49 × 67 × 45 mm
Design	Split-core cable current transformer
Secondary connection	Cable
Touch protection	yes
Packaging (W × H × D)	80 × 155 × 63 mm
Rated current	200, 250, 300, 400, 500, 150 A
Instrument security factor	FS 5

Drawings and views

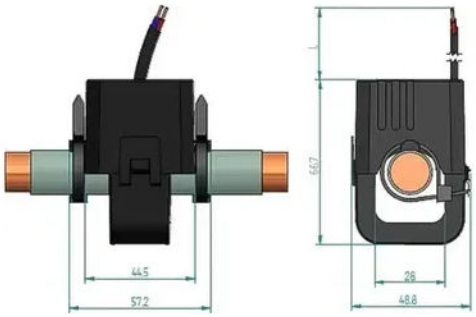

Dimensional drawing 1

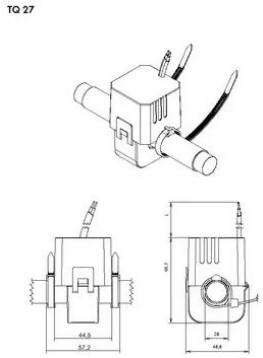

Dimensional drawing 2



Open

AR Tradelectric GmbH
Boligweg 5a
67373 Dudenhofen · Germany
info@stromwandler24.de · stromwandler24.de
stromwandler24.de/en/produkte/kabelumbau-stromwandler/tq-27

Managing director: Annette Fast
Amtsgericht Ludwigshafen HRB 69182
VAT ID DE361168308

Types

Output	Cl.	Rated current A					
		150	200	250	300	400	500
1 A	0.5	–	–	–	–	–	0.2 VA 70006-1016
	1	–	0.2 VA 70006-1012	0.2 VA 70006-1013	0.2 VA 70006-1014	0.2 VA 70006-1015	–
5 A	1	–	–	1 VA 70006-1050	1 VA 70006-1044	1 VA 70006-1051	–
333 mV	1	70006-1072	70006-1073	70006-1074	–	70006-1075	–

Conditions of use	
Normative standards	IEC 61869 part 1 + 2
Rated short-time thermal current	Ith = 60 x Ipr / 1s
Rated continuous thermal current	Icth = 1
Rated insulation level	0,72/3/-kV
Rated frequency	50 - 60 Hz
Insulation class	E / F / H

Environmental conditions	
Installation location	Indoor use
Ambient temperature	-10°C ... +55°C
relative humidity	5% ... 85%, no condensation
Altitude	up to 2000 m
Protection class (secondary terminals)	IP20
Remark	Only suitable for insulated conductor

Secondary cable		
Secondary current	Diameter	Length
1 A	0.5 mm	3 m
5 A	1.5 mm	0.5 m
333 mV	0.5 mm	3 m