# TC 18





Article features

- Very compact
- Excellent for retrofitting, as the primary circuit does not have to be interrupted
- Especially suitable for digital measuring instruments
- Super fast and easy installation
- Transformer secured by UV-resistant cable ties
- This cable conversion current transformer is supplied with multi-colour coded connection leads

| Technical data | |
|---|---|
| Round conductor | Ø 18 mm |
| Dimensions (W × H × D) | 35.6 × 50.4 × 36 mm |
| Design | Split-core cable current transformer |
| Secondary connection | Cable |
| Touch protection | yes |
| Packaging (W × H × D) | 80 × 155 × 63 mm |
| Rated current | 60, 75, 100, 125, 150, 200, 250 A |
| Instrument security factor | FS 5 |

## Drawings and views

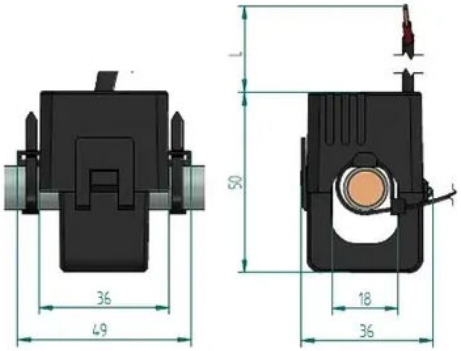


Dimensional drawing 1

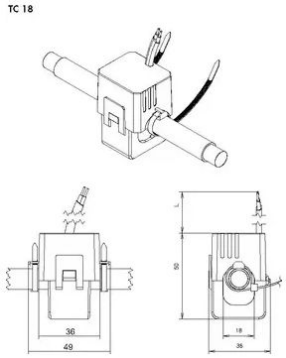


Dimensional drawing 2



Open

| Types | | | | | | | | |
|---|---|---|---|---|---|---|---|---|
| Output | Cl. | Rated current A | | | | | | |
| | | 60 | 75 | 100 | 125 | 150 | 200 | 250 |
| 1 A | 1 | – | – | – | – | – | 0.2 VA<br>70006-1006 | 0.2 VA<br>70006-1007 |
| | 3 | 0.2 VA<br>70006-1001 | 0.2 VA<br>70006-1002 | 0.2 VA<br>70006-1003 | 0.2 VA<br>70006-1004 | 0.2 VA<br>70006-1005 | – | – |
| 333 mV | 3 | 70006-1070 | – | 70006-1071 | – | – | – | – |

| Conditions of use | |
|---|---|
| Normative standards | IEC 61869 part 1 + 2 |
| Rated short-time thermal current | Ith = 60 x Ipr / 1s |
| Rated continuous thermal current | Icth = 1 |
| Rated insulation level | 0,72/3/-kV |
| Rated frequency | 50 - 60 Hz |
| Insulation class | E / F / H |

| Environmental conditions | |
|---|---|
| Installation location | Indoor use |
| Ambient temperature | -10°C ... +55°C |
| relative humidity | 5% ... 85%, no condensation |
| Altitude | up to 2000 m |
| Protection class (secondary terminals) | IP20 |
| Remark | Only suitable for insulated conductor |

| Secondary cable | | |
|---|---|---|
| Secondary current | Diameter | Length |
| 1 A | 0.5 mm | 3 m |
| 333 mV | 0.5 mm | 3 m |